PRODUCT RANGE

Orca®

SOLAR LIGHTING

SOLAR LIGHTING ENGINEERED FOR AUSTRALIA'S PUBLIC INFRASTRUCTURE

Orca Solar Lighting provides premium, commercial-grade solar lighting solutions for Australian roads, public infrastructure and commercial applications.

Designed in Australia for Australian conditions, our solar lighting solutions deliver sustainable, all-night light without noise, fumes or ongoing diesel usage.

An engineering-led approach to solar lighting

What sets Orca apart is our engineering-led approach.

Every solar lighting solution is custom engineered for each project, ensuring consistent lighting performance and compliance with Australian and New Zealand lighting standards, while remaining cost-effective over the life of the asset. This approach ensures systems are correctly designed for their environment, rather than relying on generic, off-the-shelf configurations.

Since 2007, we've delivered solar lighting solutions for a wide range of public and commercial infrastructure projects across Australia. Our customers include engineers, lighting professionals, asset managers, councils and government departments who choose Orca for our reputation for delivering solar lighting solutions that won't fail.

Our systems are designed as long-life infrastructure assets, supported by a 20+ year design life, 10-year warranties, and optional performance guarantees.

SOLAR BOLLARDS

AUSTRALIAN SMART LIGHTING SUMMIT 2016

AUSTRALIAN MADE

SBL2 Solar Lighting Bollards

The SBL2 Solar Lighting Bollard is a specification-grade, Australian Made solution designed for public infrastructure and commercial environments.

Engineered for harsh Australian conditions, the SBL2 delivers reliable, all-night light and is built as a long-life infrastructure asset, with a 10+ year design life and a 10-year warranty.

Key features and benefits

- IK10 vandal resistant for public and high-traffic areas
- IP68 submersible, suitable for flood-prone locations
- Multiple power settings to cope with sites with heavy shade
- Identical-looking 12V non-solar option allows a consistent product appearance across areas where solar is not suitable
- Quick and easy installation with no trenching, cabling or power connection
- Reduced installation time and no ongoing power costs

World's Best Solar Bollard

Orca Solar Lighting is an approved Local Buy supplier and a local government preferred supplier in NSW, QLD, SA and NT, making it easier for councils and government departments to purchase with confidence.

AVERO & AVERO PLUS SOLAR PATHWAY LIGHTING

Avero is an architecturally designed, stand-alone solar lighting system for pathways, bikeways, driveways, minor roads, jetties and marina applications.

Designed in Australia by Orca Solar Lighting, the Avero range is optimised for **AS/NZS 1158.3.1:2020 Subcategory PP4 and PP5 lighting standards**, where **appropriate light levels, minimal light spill and consistent dusk-to-dawn performance** are required.

Avero and Avero Plus explained

Avero and Avero Plus share the same design and applications, with different performance levels to suit project requirements.

- **Avero** operates at **6 W from dusk to dawn** and is suited to applications where lower light levels are appropriate.
- **Avero Plus** operates at **10 W from dusk to dawn** under the **PP2 compliance category** and incorporates a **higher-capacity battery**, supporting increased light output and performance in more demanding locations.

Both models are designed to deliver highly reliable, all-night lighting in public and commercial environments.

avero®

Precision pathway lighting™

Light Source	Cree XHP70B Extreme high-power
Lumen Output	> 2,061 (adaptive), 867 (dusk to dawn)
Colour Temp.	3,000K (warm white)
Colour Rendering	CRI 80+
Optic Distribution	IESNA Type II medium (side throw)
LED Life	L90B10 > 100,000 hrs at 25°C T°
IP Rating	IP67 (LED module, controller, and connections)
Solar Module	60W monocrystalline, 3.2mm tempered glass
Solar Eff. Life	Min. 80% > 25 Years
Battery Type	LiFePO4 32Ah 12.8v 410 Wh (Lithium Iron Phosphate)
Battery Cycle Life	≥4,000 Cycles at 0.2C to 80% Depth of Discharge
Controller	PWM with programmable step-up LED driver
Lighting Control	Programmable and adaptive with PIR function
Control Profiles	High mode, low mode, or full dusk to dawn
Warranty	5 Year limited warranty (extended periods available)

	Avero	**Avero Plus**
LED Power	Up to 14W	
Dusk to Dawn Power	6W	10W
CCT	3000K	
Lumens	Up to 2,061 lm	
Luminaire Efficacy	Up to 149 lm/W	
CRI	≥80	
Luminaire Optics	Type II Medium	
Solar PV Panel	60W Monocrystalline	
Battery	12.8V dc 32Ah $LiFePO_4$	12.8V dc 64Ah $LiFePO_4$
Autonomy	Up to 4 Days	
Solar Charge Controller	MPPT with sensor	
Standard Mounting Pole	6m tapered round pole, powder coated black	
Other features	PIR sensor adaptive lighting controls Programmable remote control	

VERTEX SL & VERTEX SL PLUS SOLAR AREA LIGHTING

The **Vertex solar lighting range delivers mission-critical solar street and area lighting systems** designed in Australia for applications where dependable, all-night lighting is essential.

Designed by Orca Solar Lighting, Vertex systems are used across streets, car parks, pathways, bikeways, roads and large open areas, including mining, gas and industrial environments.

Vertex SL and Vertex SL Plus explained

Vertex SL and Vertex SL Plus are intended for similar applications, with different performance levels to suit site scale and lighting demand.

- **Vertex SL** delivers **16 W from dusk to dawn**, making it suitable for smaller streets, pathways and area lighting where moderate light output is required.
- **Vertex SL Plus** delivers **30 W from dusk to dawn**. The increased output supports larger spaces such as car parks, wider roadways and open industrial areas, while maintaining all-night operation and system autonomy.

Both models are designed to deliver **highly reliable, all-night lighting** with **up to four days of battery autonomy**, suitable for public infrastructure and mission-critical environments.

Vertex SL®

ADVANCED SOLAR LIGHTING.

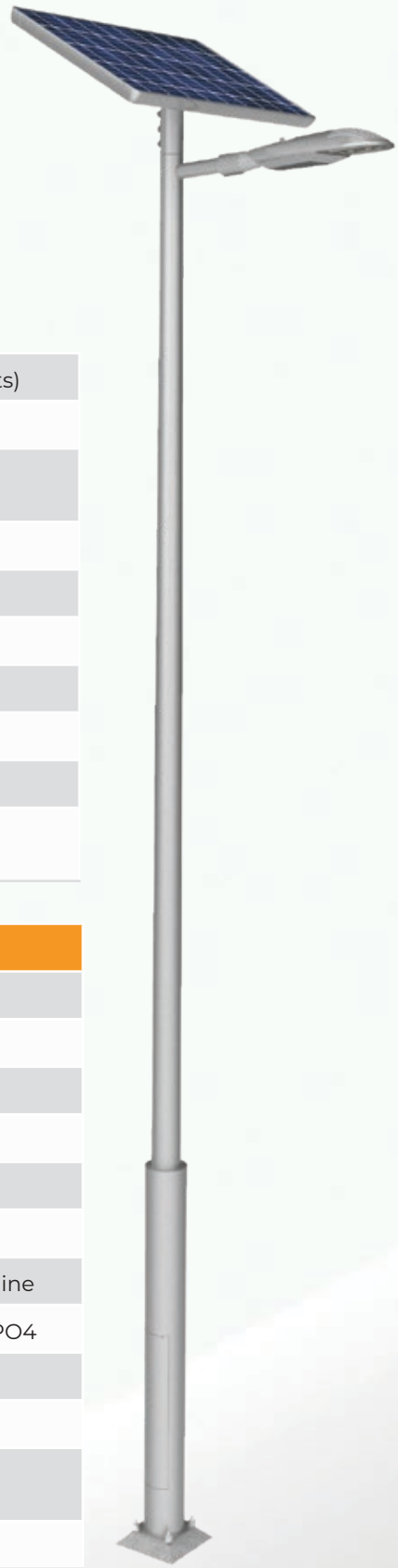

Performance Summary

Designed in Australia by Orca Solar Lighting

Autonomy	Up to 4 Days (subject to location requirements)
Battery Capacity Vertex® SL	76Ah 12.8V (973 Wh)
Battery Capacity Vertex SL Plus	152Ah 12.8V (1946 Wh)
PV Module: Vertex® SL	150W Monocrystalline
PV Module: Vertex SL Plus	290W Monocrystalline
Lumen Output	Up to 4,000 Lumens
Luminaire Efficacy	Up to 147 LPW
Colour Rendering Index	Minimum 80 CRI
Colour Temperature	3000K/4000K
Warranty	5 Year Limited Warranty with Performance Guarantee

	Vertex SL	Vertex SL Plus
Dusk to Dawn Power	16W	30W
CCT	3000K/ 4000K	
Lumens	Up to 2,360 lm	Up to 4,315 lm
Luminaire Efficacy	Up to 147 lm/W	
CRI	≥ 80	
Luminaire Optics	Type II, III, IV	
Solar PV Panel	150W Monocrystalline	290W Monocrystalline
Battery	12.8Vdc 76Ah LiFePO4	12.8Vdc 152Ah LiFePO4
Autonomy	Up to 4 Days	
Solar Charge Controller	MPPT	
Standard Mounting Pole	6m Slim Base Pole, Powder Coated Black	
Other Features	Programmable Remote Control	

VERTEX CUSTOMISED

The **Vertex Customised** is a configuration option within the Vertex range, designed in Australia by Orca Solar Lighting for projects that require **extended autonomy**.

Australian Made and engineered for demanding environments, the Vertex Customised increases system capacity to provide **up to 7 days of battery autonomy**, supporting reliable operation through prolonged low-sun conditions.

The Vertex Customised is suited to **mission-critical sites** where extended runtime is required, including major roads, large car parks, industrial facilities and remote infrastructure.

Vertex®
ADVANCED SOLAR LIGHTING.

AUSTRALIAN MADE.

Performance Summary

Designed in Australia by Orca Solar Lighting

Autonomy	Up to 7 Days (Subject to Location Requirements)
Lumen Output	Up to 12,000 Lumens
Luminaire Efficacy	Up to 160 LPW
Colour Rendering Index	Minimum 70 CRI
Colour Temperature	3000K, 4000K, 2700K
Warranty	5 Year Limited Warranty with Performance Guarantee

Product	Luminaire Arrangement	Pole Height	Nominal PV Array Size (W)	Battery System (V/Ah)	Luminaire Power Setting*	Optic Distribution	Luminaire Colour Temperature (CCT)
Vertex® **[VRT-UNO]**	SINGLE **[1]** TWIN **[2]**	4m **[4M]** 6m **[6M]** 8m **[8M]**	200 **[200]** 300 **[300]** 375 **[375]** 450 **[450]** Other **[___]**	12V 135Ah **[135Ah]** 12V 210Ah **[210Ah]** 24V 135Ah **[135Ah]** 24V 210Ah **[210Ah]** Other **[___]**	80W **[80W]** 51W **[51W]** 47W **[47W]** 43W **[43W]** 41W **[41W]** 37W **[37W]** 28W **[28W]** 25W **[25W]** 19W **[19W]**	150 Wide street (T3S) 200 Extra wide street (T4S) SCP Street & cycle path(T2S) ARS Roto Symmetric area PCR Pedestrian Crossing Right PCR Pedestrian Crossing Light K07 Narrow street	3000K **[30K]** 4000K **[40K]** 2700K **[27K]**

Footing Type ^	Pole Finish	Power Profile +	Custom Options
Bored Pier 1.8m (4-6m Poles) **[BP1.8]** Bored Pier 2.2m (8m Poles) **[BP2.2]**	Galvanised **[HDG]** Powder Coat **[PC__]**	Dusk to Dawn **[D2D]** 2 Timers **[2T_HR__W-__W]** 3 Timers **[3T_HR__W-__W_HR__W]** Other / Custom **[___]**	Key Operated Momentary Switch **[SWM]** Backlight shield **[BLS]** Other **[___]** **Notes**

* Power setting availability may be subject to location conditions. Please consult your sales representative for assistance on suitable power options to suit your project.

+ Power Profile setting availability may be subject to location conditions. Please consult your sales representative for assistance on suitable power profile options to suit your project.

^ Footing types are subject to site soil testing and engineered footing design. Please consult your sales consultant for advice on footing design options.

VERTEX FLAG LIGHTING

Vertex Flag Lighting is part of the **Vertex solar lighting range**, designed for **mission-critical applications** where dependable, all-night lighting is required in regulated road and transport environments.

Designed in Australia by Orca Solar Lighting, the Vertex Solar Flag Lighting System is configured specifically to meet transport authority requirements.

System configuration

- RoadLED luminaire mounted on a road lighting pole
- Solar array mounted directly to the pole
- Pole designed to meet transport authority requirements
- Standard slip-base assembly for safety and compliance
- Batteries directly buried in the ground
- Vertex Energy Management System (EMS) housed within the pole above ground

Vertex®

ADVANCED SOLAR LIGHTING.

Performance Summary

Designed and assembled in Australia

Autonomy	Up to 5 days
Lumen Output	Up to 11,000 lumens
Luminaire Efficacy	Up to 130 LPW
Colour Rendering Index	Minimum 70 CRI
Colour Temperature	4000K
Warranty	5 Year Limited Warranty with Performance Guarantee

Product Overview

AUSTRALIAN MADE.

Mission critical lighting for discerning organisations that value reliability & performance over a lower up-front cost.

The Vertex® Solar Flag Lighting System comprises the RoadLED luminaire mounted on a road light pole with the solar panel array on the pole.

The pole is specifically designed to meet the requirements of transport authorities and utilises a standard slip-base assembly.

Batteries are directly buried in the ground, whilst the Vertex EMS is secured within the base of the pole for easy maintenance access.

Li-Tech

Wom-Batt

Underground Lithium Power Pods

TEMPO

Self-cleaning High-power Luminaire 6000LM

4MTR Tilting Pole For Easy 2 Person No Crane Set Up Block Size 800mm X 800mm X 350mm

Remote Available For Easy Programming

TEMPO

Tempo is Orcas new cost effective highly portable lighting system offering massive performance in a small form factor.

Baseplate Detail

STEP 1

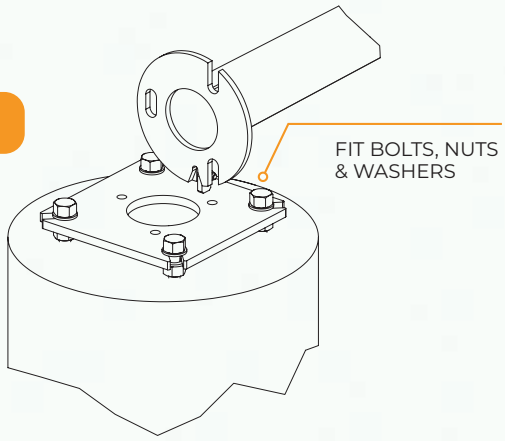

STEP 2

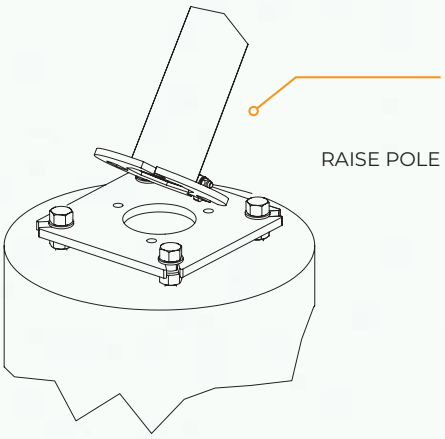

STEP 3

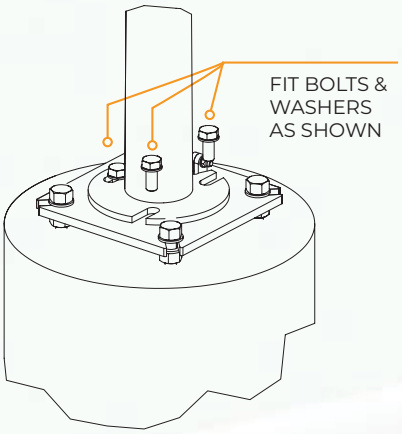

500kg Block

VERTEX CUSTOMISED HEAVY SYSTEM FOR V-CAT AND TEMPORARY LIGHTING APPLICATIONS

Vertex®
ADVANCED SOLAR LIGHTING.

AUSTRALIAN MADE.

Performance Summary

Autonomy	Up to 7 days (subject to location)
Lumen Output	up to 22000lms
Luminaire Efficacy	130lms/w
Colour Rendering Index	>70
Colour Temperature	3000K, 4000K
Warranty	5 Years

VERTEX® SOLAR LIGHTING SYSTEM TEMPORARY V CATEGORY LIGHTING

Mission critical lighting for discerning organisations that value high reliability and performance.

Vertex® Temporary Solar Lighting Systems use industry standard high output LED luminaires mounted on a 9m tapered solar pole with 3m curved outreach. Solar panels are mounted lower with batteries and EMS (System Energy Management System) are securely housed in a steel and aluminium powder coat box, mounted to a 4.3t engineered concrete block.

Vertex® Solar Lighting Systems are custom designed and built to suit application ensuring that your lighting project has a system designed to meet the exact project specification requirements.

Designed in Australia by Orca Solar Lighting. Vertex® Solar Lighting Systems have 5 year warranty. Wind Region C Version Available.

Specification Criteria						
Product	Pole Height	Power Profile	Colour Temp.	Optic	Power Profile	Footing
Vertex® Temporary V Category	9m 10.5m	165W 100W 80W 60W	3000K 4000K	ROADLED	Dusk to Dawn	4.3t Concrete Block

Single and double outreach available.

TEMPORARY SOLAR LIGHTING SOLUTIONS

Orca Solar Lighting provides temporary solar lighting solutions for Tier One contractors, delivering industrial-strength, reliable, all-night lighting suitable for temporary works and construction staging.

Systems are designed to support **effective and compliant lighting to AS/NZS 1158.3.1**, with flexible mounting options to suit a wide range of site conditions.

All systems can be adapted to **various concrete block sizes**, allowing flexibility across different temporary lighting applications.

Temporary lighting configurations overview

Configuration	Output	Mounting / Block	Typical application
Tempo	6,000 Lm	4 m hinged pole	Smaller temporary works, access areas
Vertex Pro Pole	Up to 32 W	Pro Pole	Temporary road and site lighting
Avero Plus	Up to 14 W	1.5 t concrete block	Pathways, pedestrian and amenity areas
Vertex SL Plus	Up to 30 W	1.5 t concrete block	Higher-output temporary road and area lighting
Vertex	Up to 60 W	2.5 t concrete block	Larger temporary works and open areas
Vertex customised systems	60 W–165 W	4.3 t concrete block	Area, flood and flag lighting using high- or mid-set panels

SCAN ME

1300 760 778
www.orcasolarlighting.com.au

Orca®
SOLAR LIGHTING